RT 2132 - 1/2” IMPACT WRENCH

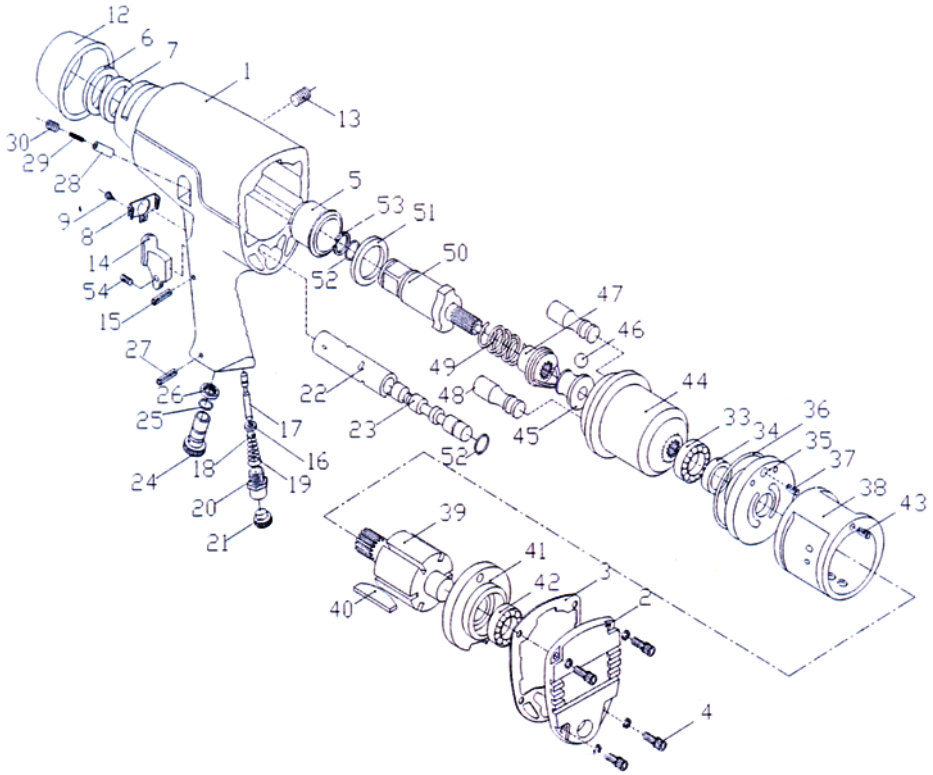

SI.NO	PART NO	DESCRIPTION	QTY	SI.NO	PART NO	DESCRIPTION	QTY
1	SRT 2132-01	MOTOR HOUSING	1	26	SRT 2132-28	PIN	1
2	SRT 2132-02	REAR COVER	1	27	SRT 2132-29	SPRING	1
3	SRT 2132-03	REAR GASKET	1	28	SRT 2132-30	CLAMP SCREW	1
4	SRT 2132-04	HEX.SOCKET BOLT	4	29	SRT 2132-33	BALL BEARING	1
5	SRT 2132-05	ANIL BUSHING	1	30	SRT 2132-34	OIL SEAL	1
6	SRT 2132-06	OIL SEAL	1	31	SRT 2132-35	FRONT END PLATE	1
7	SRT 2132-07	RUBBER SPACER	1	32	SRT 2132-36	O - RING	1
8	SRT 2132-08	COVER	1	33	SRT 2132-37	PIN	1
9	SRT 2132-09	PHILLIPS PAN SCREW	1	34	SRT 2132-38	CYLINDER	1
10	SRT 2132-12	PROTECTING RUBBER	1	35	SRT 2132-39	ROTOR	1
11	SRT 2132-13	CLAMP SCREW	1	36	SRT 2132-40	ROTOR FAN	6
12	SRT 2132-14	TRIGGER	1	37	SRT 2132-41	REAR END PLATE	1
13	SRT 2132-15	TRIGGER PIN	1	38	SRT 2132-42	BALL BEARING	1
14	SRT 2132-16	BUSHING	1	39	SRT 2132-43	PIN	1
15	SRT 2132-17	THROTTLE PIN	1	40	SRT 2132-44	HAMMER CAGE	1
16	SRT 2132-18	STEEL BALL	1	41	SRT 2132-45	DRIVE CAM BASE	1
17	SRT 2132-19	SPRING	1	42	SRT 2132-46	STEEL BALL	1
18	SRT 2132-20	HOUSE FITTING	1	43	SRT 2132-47	DRIVE CAM	1
19	SRT 2132-21	DUST COVER	1	44	SRT 2132-48	HAMMER BAR	2
20	SRT 2132-22	VALVE SLEEVE	1	45	SRT 2132-49	SPRING	1
21	SRT 2132-23	REVERSE VALVE	1	46	SRT 2132-50	ANVIL	1
22	SRT 2132-24	AIR REGULATOR	1	47	SRT 2132-51	WASHER	1
23	SRT 2132-25	O - RING	1	48	SRT 2132-52	O - RING	2
24	SRT 2132-26	LOCATING RING	1	49	SRT 2132-53	ANVIL COLLAR	1
25	SRT 2132-27	PIN	1	50	SRT 2132-54	CLAMP SCREW	1

RAMSIVE TOOLS PVT.LTD.

S.F.No:412, Tex park Road, Nehru Nagar, SITRA, Coimbatore-641014.

Phone: 91-422-2905003 - Mobile: 9047023253.

www.ramsivetools.com